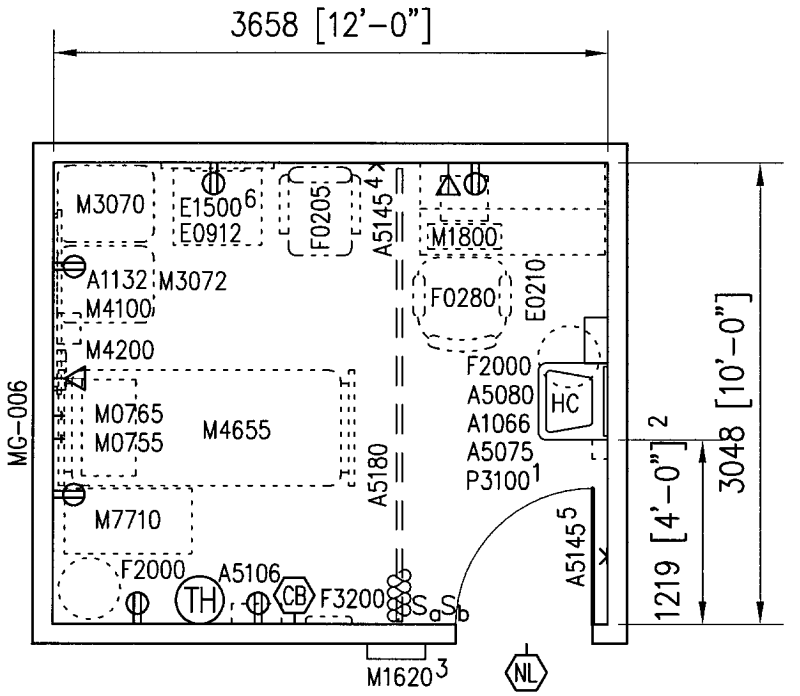

KEY NOTES

1. P3200, ELECTRONIC LAVATORY, MAY BE USED INSTEAD OF P3100, LAVATORY. FOR THE P3200 PROVIDE EITHER BATTERY POWER OR HARD WIRED CONNECTION.
2. INCREASE THIS DIMENSION AS NEEDED TO COMPLY WITH ADA IF THE DOOR HAS A CLOSER OR IF 610 [2'-0"] CLEARANCE IS NOT AVAILABLE AT THE STRIKE SIDE OF THE DOOR.
3. COORDINATE LOCATION OF M1620, PATIENT CHART HOLDER, AND ROOM SIGNAGE.
4. MOUNT A5145, HOOK, AT 1372 [4'-6"] AFF.
5. MOUNT A5145, HOOK, AT 1219 [4'-0"] AFF. PROVIDE 2-A5145'S FOR NAVY PROJECTS ONLY. MOUNT 1-A5145 AT 1219 [4'-0"] AFF AND 1-A5145 AT 1524 [5'-0"] AFF.
6. LENGTH OF E1500, WALL MOUNTED RAIL, TO BE DETERMINED BY MANUFACTURER/INSTALLER.

OUTPATIENT EKG TESTING (OPEC1) 3.16.01

CARDIOLOGY/PULMONARY SERVICES

FLOOR/EQUIPMENT PLAN 11.15 NSM (120 NSF)

DATE: 01/28/2002

0 1000 2000

1:50 SCALE (MILLIMETERS)

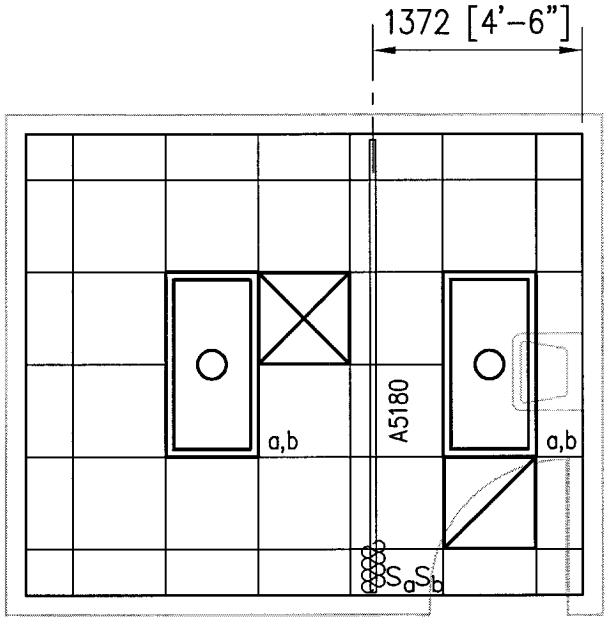

OUTPATIENT EKG TESTING (OPEC1) 3.16.01

CARDIOLOGY/PULMONARY SERVICES

CEILING PLAN

DATE: 01/28/2002

0 1000 2000

1:50 SCALE (MILLIMETERS)

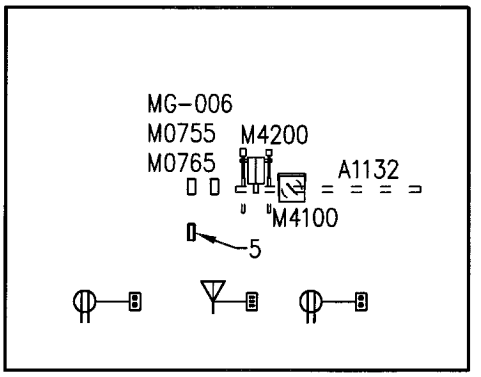

WEST

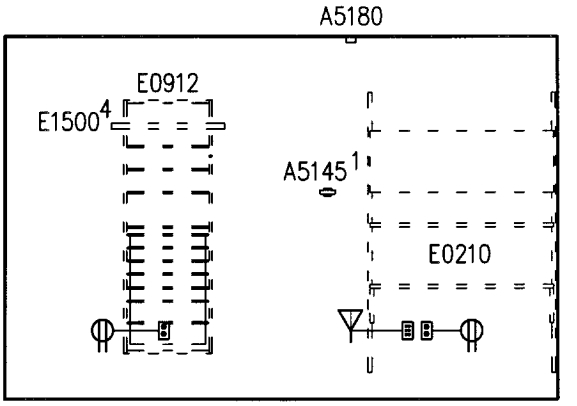

NORTH

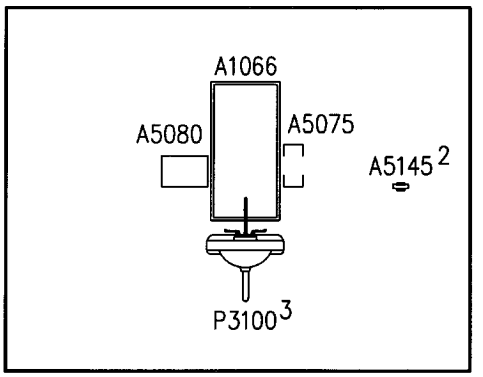

EAST

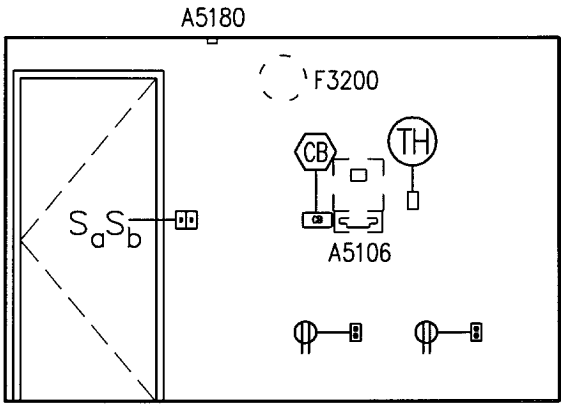

SOUTH

NOTES
1. SEE TYPICAL EQUIPMENT MOUNTING HEIGHTS BEGINNING ON SHEET 7.01.01.

KEY NOTES
1. MOUNT A5145, HOOK, AT 1372 [4'-6"] AFF.
2. MOUNT A5145, HOOK, AT 1219 [4'-0"] AFF. PROVIDE 2-A5145'S FOR NAVY PROJECTS ONLY. MOUNT 1-A5145 AT 1219 [4'-0"] AFF AND 1-A5145 AT 1524 [5'-0"] AFF.
3. P3200, ELECTRONIC LAVATORY, MAY BE USED INSTEAD OF P3100, LAVATORY. FOR THE P3200 PROVIDE EITHER BATTERY POWER OR HARD WIRED CONNECTION.
4. LENGTH OF E1500, WALL MOUNTED RAIL, TO BE DETERMINED BY MANUFACTURER/INSTALLER.
5. VACUUM SLIDE.

OUTPATIENT EKG TESTING (OPEC1) 3.16.01

CARDIOLOGY/PULMONARY SERVICES

ELEVATIONS

DATE: 01/28/2002

0 1000 2000

1:50 SCALE (MILLIMETERS)

Medical Equipment Room Guide Plates

3.16 Cardiology/Pulmonary Services

Plate Number 3.16.01
Room Name OUTPATIENT EKG TESTING
SEPS # OPEC1

JSN	Nomenclature	Qty	Army Cat	Navy Cat	AF Cat	Utilities 1	2	3	4	5	6
A1066	Mirror, Float Glass, With SS Frame, 36X18	1	A	A	A	.	.	.	.	.	J
A1132	Rail, Accessory Mounting, Length As Required	1	C	C	C	.	.	.	.	.	.
A5075	Dispenser, Soap, Disposable	1	C	C	C	.	.	.	.	.	.
A5080	Dispenser, Paper Towel, SS, Surface Mounted	1	A	A	A	.	.	.	.	.	J
A5106	Waste Disposal Unit, Sharps w/Glove Dispenser	1	C	A	C	.	.	.	.	.	.
A5145	Hook, Garment, Double, SS, Surface Mounted	2	A	A	A	.	.	.	.	.	J
A5180	Track, Cubicle, Surface Mounted, With Curtain	1	A	A	A	.	.	.	.	.	J
E0210	Worksurface, w/Overhead Cab, Wall Mtd, 48" W	1	C	C	C	.	A	.	.	.	J
E0912	Locker, Supply, Med Surg, Wall Mtd, 23"W x 20"D	1	C	C	C	.	.	.	.	.	.
E1500	Rail, MOD, W/MNTD, HX144XD	1	C	C	C	.	.	.	.	.	J
F0205	Chair, Side With Arms	1	C	C	C	.	.	.	.	.	.
F0280	Chair, Swivel, Low Back	1	C	C	C	.	.	.	.	.	.
F2000	Basket, Wastepaper, Round, Metal, 18 H x 16 Dia.	2	C	C	C	.	.	.	.	.	.
F3200	Clock, Battery, 12" Diameter	1	C	C	C	.	.	.	.	.	.
M0755	Flowmeter, Oxygen, Low Flow	1	C	C	C	.	.	A	.	.	.
M0765	Regulator, Vacuum	1	C	C	C	.	.	B	.	.	.
M1620	Holder, Chart, Patient, Wall or Door Mounted	1	A	A	A	.	.	.	.	.	.
M1800	Computer, Microprocessing	1	C	C	C	.	A	.	.	.	.
M3070	Hamper, Linen, Mobile, w/Lid	1	C	C	C	.	.	.	.	.	.
M3072	Frame, Infectious Waste Bag w/Lid	1	C	C	C	.	.	.	.	.	.
M4100	Sphygmomanometer, Aneroid, Wall Mounted	1	C	C	C	.	.	.	.	.	.
M4200	Otoscope/Ophthalmoscope, Wall Mounted	1	C	C	C	.	A	.	.	.	.
M4655	Stretcher, Mobile, CRS, 9 Position	1	C	C	C	.	.	.	.	.	.
M7710	Electrocardiograph, 12 Lead, Portable	1	C	C	C	.	A	.	.	.	.
P3100	Lavatory, Vitreous China, Slab Type	1	A	A	A	D	.	.	.	.	.