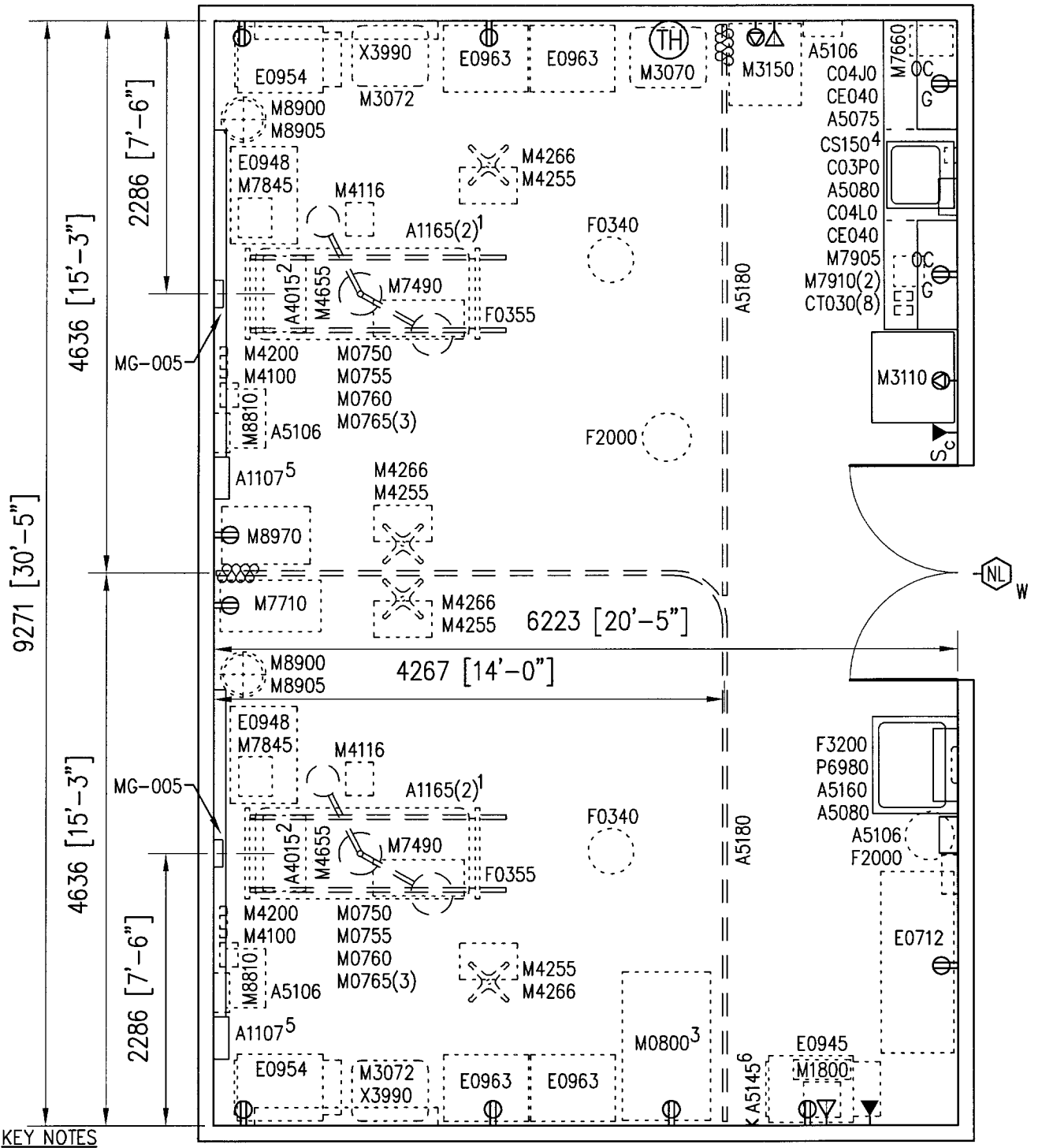

KEY NOTES

1. PROVIDE A1165, IV TRACKS, FOR NAVY PROJECTS ONLY.
2. A4015, ELAPSED TIME CLOCK, IS OPTIONAL.
3. M0800, INFANT CARE CENTER, IS FOR ARMY PROJECTS ONLY AND IS OPTIONAL.
4. PROVIDE ELECTRONIC FAUCET.
5. PROVIDE A1108, MOVEABLE HEADWALL, INSTEAD OF A1107, UTILITY RAIL SYSTEM, FOR NAVY PROJECTS. SEE ELEVATION OF A1107 FOR UTILITIES.
6. MOUNT A5145, HOOK, AT 1372 [4'-6"] AFF. PROVIDE 2-A5145'S FOR NAVY PROJECTS ONLY. MOUNT 1-A5145 AT 1372 [4'-6"] AFF AND 1-A5145 AT 1524 [5'-0"] AFF.

TREATMENT ROOM, EMERGENCY CARE, 2 BED (TRET5) 3.05.05

EMERGENCY SERVICES

FLOOR/EQUIPMENT PLAN 57.69 NSM (621 NSF)

DATE: 01/28/2002

0 1000 2000

1:50 SCALE (MILLIMETERS)

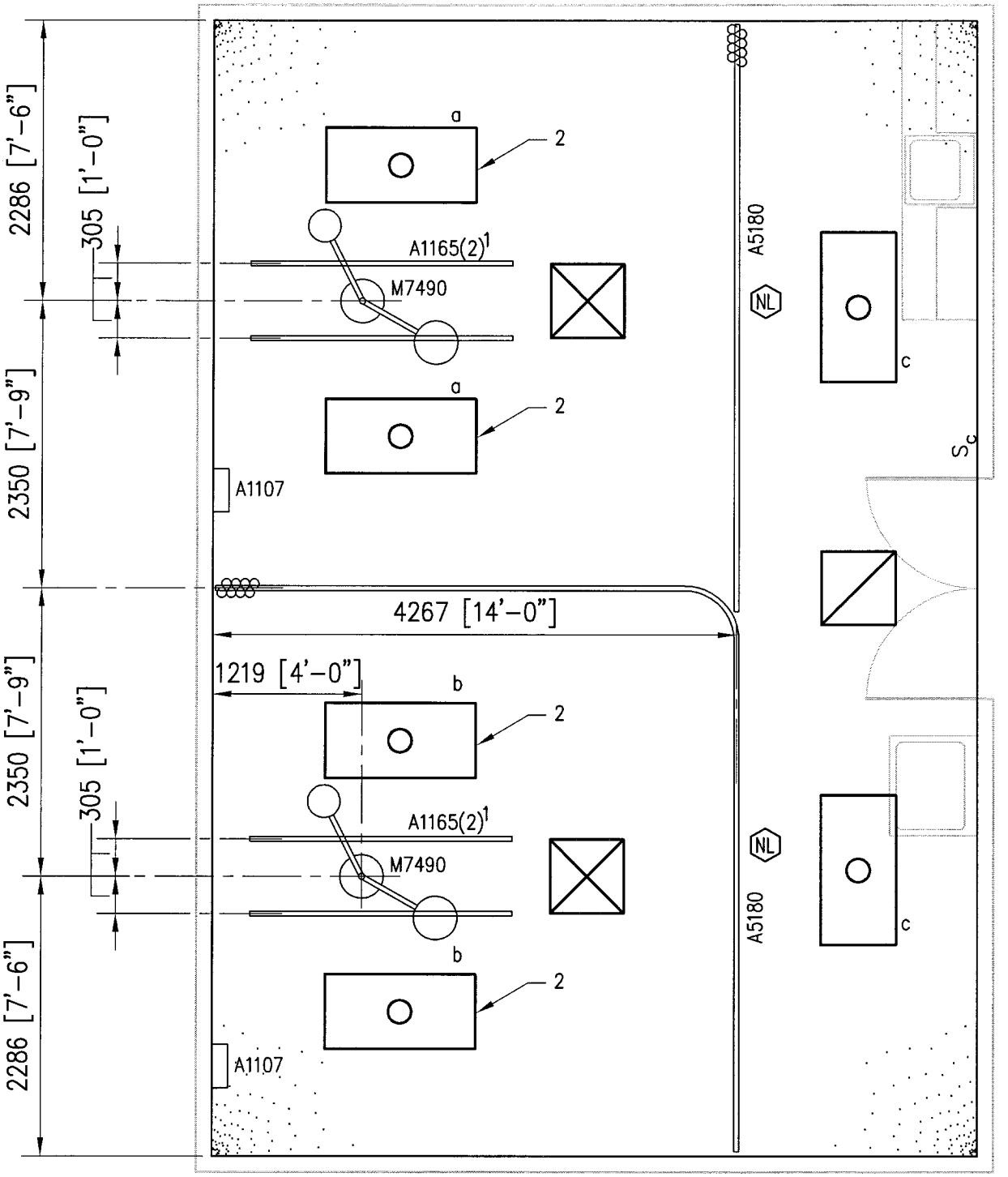

KEY NOTES

1. PROVIDE A1165, IV TRACKS, FOR NAVY PROJECTS ONLY.
2. LIGHT FIXTURE IS CONTROLLED BY SWITCH LOCATED IN A1110, PREFABRICATED HEADWALL. SEE HEADWALL ELEVATION FOR SWITCH ELEVATION.

TREATMENT ROOM, EMERGENCY CARE, 2 BED (TRET5) 3.05.05

EMERGENCY SERVICES

CEILING PLAN

DATE: 01/28/2002

0 1000 2000

1:50 SCALE (MILLIMETERS)

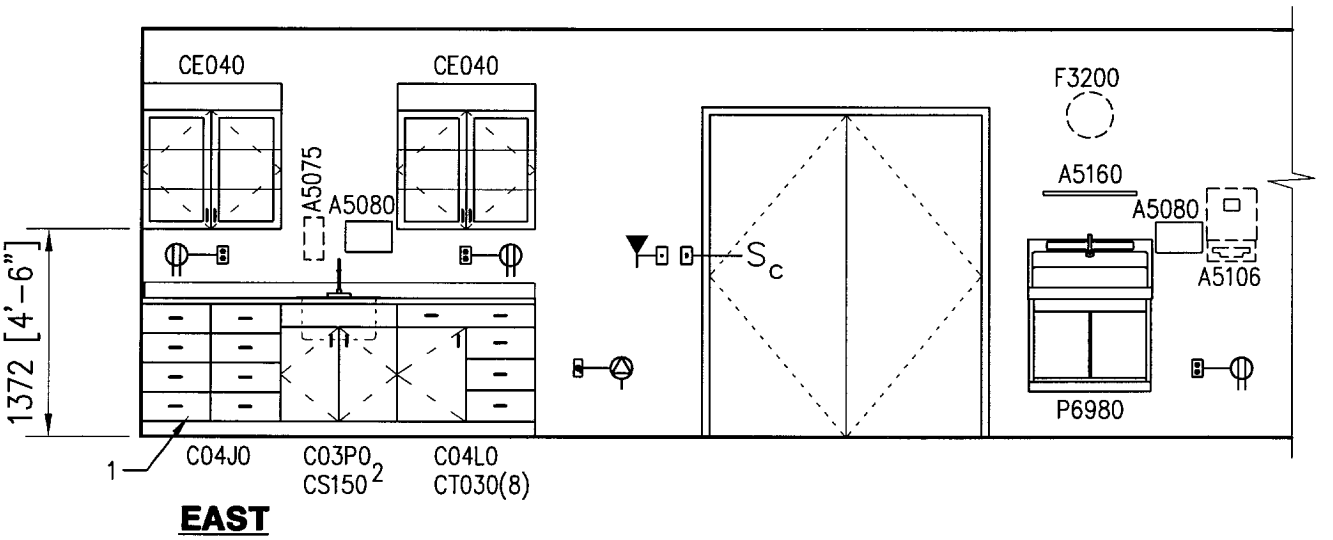

NOTES
1. SEE TYPICAL EQUIPMENT MOUNTING HEIGHTS BEGINNING ON SHEET 7.01.01.

KEY NOTES
1. ALL CABINETS SHALL BE LOCKING.
2. PROVIDE ELECTRONIC FAUCET.

TREATMENT ROOM, EMERGENCY CARE, 2 BED (TRET5) 3.05.05

EMERGENCY SERVICES

ELEVATIONS

DATE: 01/28/2002

0 1000 2000

1:50 SCALE (MILLIMETERS)

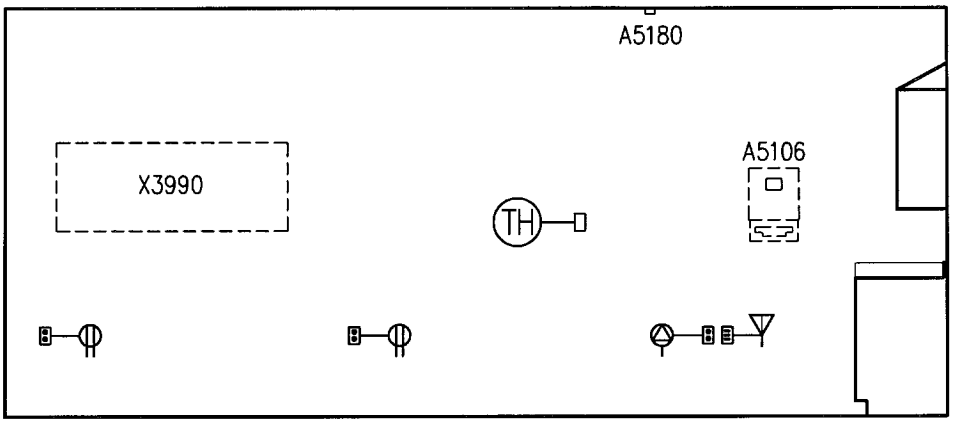

NORTH

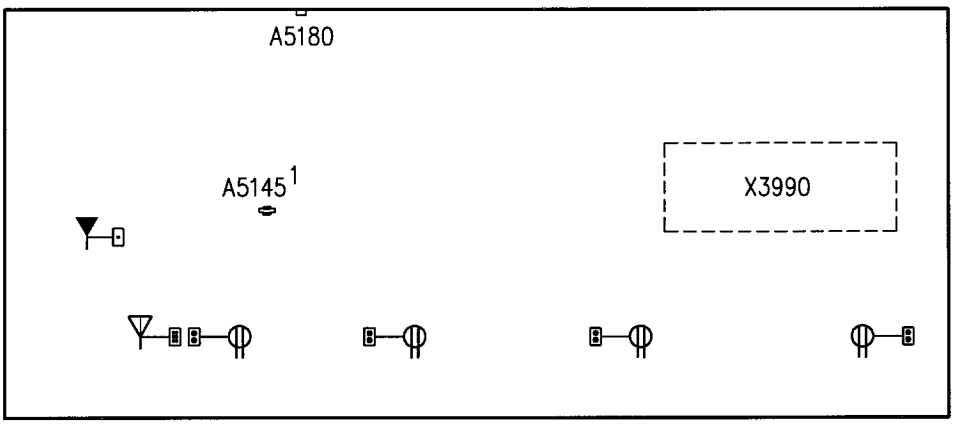

SOUTH

NOTES
1. SEE TYPICAL EQUIPMENT MOUNTING HEIGHTS BEGINNING ON SHEET 7.01.01.

KEY NOTES
1. MOUNT A5145, HOOK, AT 1372 [4'-6"] AFF. PROVIDE 2-A5145'S FOR NAVY PROJECTS ONLY. MOUNT 1-A5145 AT 1372 [4'-6"] AFF AND 1-A5145 AT 1524 [5'-0"] AFF.

TREATMENT ROOM, EMERGENCY CARE, 2 BED (TRET5) 3.05.05

EMERGENCY SERVICES

ELEVATIONS

DATE: 01/28/2002

0 1000 2000

1:50 SCALE (MILLIMETERS)

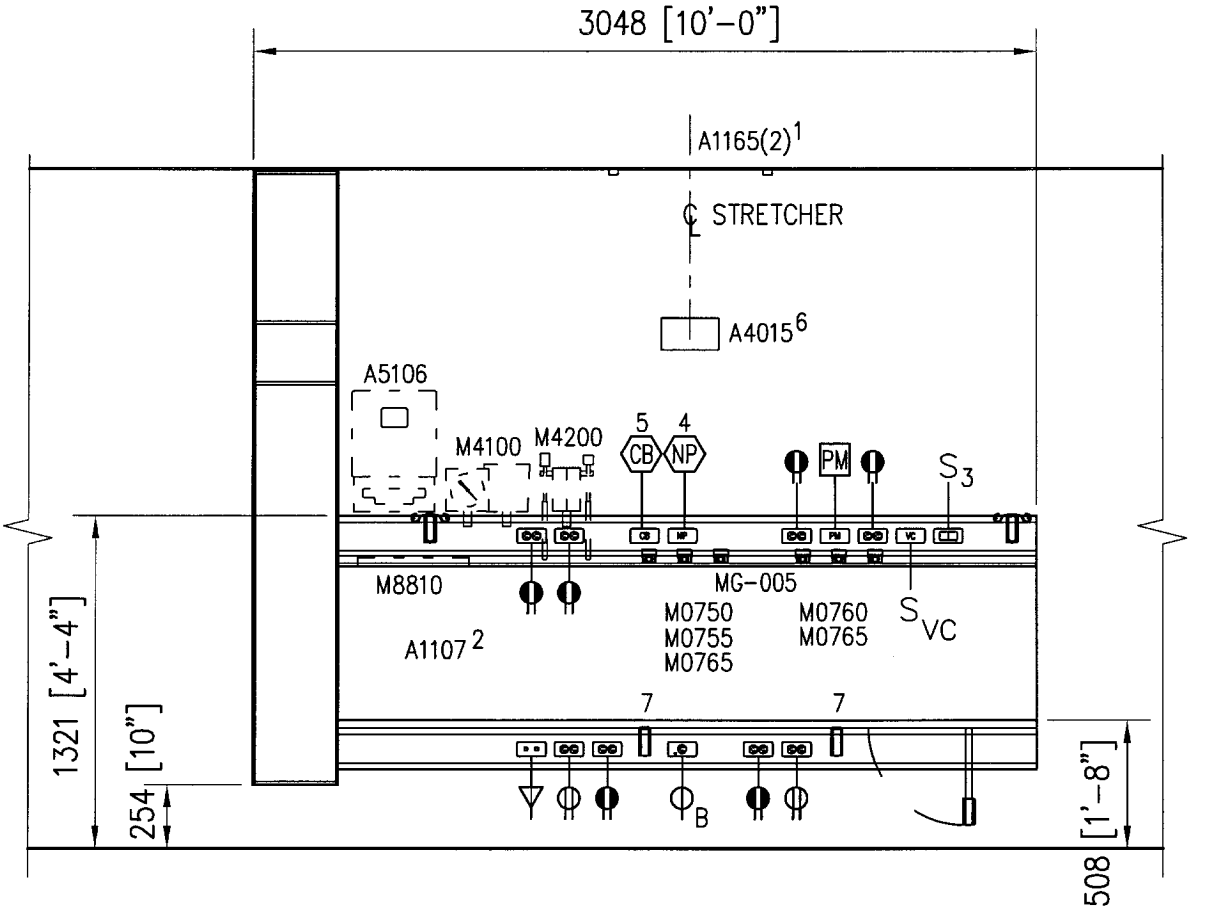

TYPICAL BED

NOTES
1. THE UTILITIES AND DEVICES INDICATED ARE FOR AN EMERGENCY ROOM IN A HOSPITAL.
2. ALL RECEPTACLES IN HEADWALL SHALL BE HOSPITAL GRADE.

KEY NOTES
1. PROVIDE A1165, IV TRACKS FOR NAVY PROJECTS ONLY.
2. PROVIDE A1108, MOVEABLE HEADWALL, INSTEAD OF A1107, UTILITY RAIL SYSTEM, FOR NAVY PROJECTS.
3. SWITCH CONTROLS CEILING MOUNTED FLUORESCENT LIGHT FIXTURES.
4. TONE/VISUAL OR AUDIO/VISUAL AS REQUIRED BY USING MILITARY DEPARTMENT.
5. CODE BLUE AS REQUIRED BY USING MILITARY DEPARTMENT.
6. A4015, ELAPSED TIME CLOCK, IS OPTIONAL.
7. VACUUM SLIDE.

TREATMENT ROOM, EMERGENCY CARE, 2 BED (TRET5) 3.05.05

EMERGENCY SERVICES

ELEVATIONS

DATE: 01/28/2002

0 500 1000

1:30 SCALE (MILLIMETERS)

Medical Equipment Room Guide Plates

3.05 Emergency Services

Plate Number 3.05.05

Room Name TREATMENT ROOM, EMERGENCY CARE ROOM, 2 BED

SEPS # TRET5

JSN	Nomenclature	Qty	Army Cat	Navy Cat	AF Cat	Utilities 1	2	3	4	5	6
A1107	Rail System , Utility, Gas and Electric	2	A	A	A	.	F	G	.	.	A
A1165	Track, IV, Ceiling Mounted, 7 Foot	4	A	A	A	.	.	.	.	.	J
A4015	Clock, Elapsed Time, Electric	2	A	A	A	.	A	.	.	.	D
A5075	Dispenser, Soap, Disposable	1	C	C	C	.	.	.	.	.	.
A5080	Dispenser, Paper Towel, SS, Surface Mounted	2	A	A	A	.	.	.	.	.	J
A5106	Waste Disposal Unit, Sharps w/Glove Dispenser	4	C	A	C	.	.	.	.	.	.
A5145	Hook, Garment, Double, SS, Surface Mounted	1	A	A	A	.	.	.	.	.	J
A5160	Shelf, 8" Depth, SS, Surface Mounted	1	A	A	A	.	.	.	.	.	J
A5180	Track, Cubicle, Surface Mounted, With Curtain	2	A	A	A	.	.	.	.	.	J
C03P0	Cabinet, Sink, U/C/B, 2 Door, 36x30x22	1	A	A	A	.	.	.	.	.	.
C04J0	Cabinet, U/C/B, 8 Half Drawer, 36x36x22	1	A	A	A	.	.	.	.	.	.
C04L0	Cabinet, U/C/B, 1 DR, 3 Half DR, 1 Door, 36x36x22	1	A	A	A	.	.	.	.	.	.
CE040	Cabinet, W/H, 2 SH, 2 GDO, Sloping Top, 38x36x13	2	A	A	A	.	.	.	.	.	J
CS150	Sink, SS, Single Compartment, 10x19x16 ID	1	A	A	A	D	.	.	.	.	.
CT030	Countertop, High Pressure Laminate	8	A	A	A	.	.	.	.	.	.
E0712	Table, Process, Adj Height, 10 Drawer, 60"W x 24"D	1	C	C	C	.	.	.	.	.	.
E0945	Cart, Computer, Mobile, 48"H x 54"W x 22"D	1	C	C	C	.	.	.	.	.	.
E0948	Cart, General Storage, Mobile, 42"H x 32"W x 22"D	2	C	C	C	.	.	.	.	.	.
E0954	Cart, Emergency, Mobile, 66"H x 52"W x 22"D	2	C	C	C	.	.	.	.	.	.
E0963	Cart, General Storage, Mobile, 72"H x 23"W x 22"D	4	C	C	C	.	.	.	.	.	.
F0340	Stool, Self Adjusting	2	C	C	C	.	.	.	.	.	.
F0355	Footstool, Straight	2	C	C	C	.	.	.	.	.	.
F2000	Basket, Wastepaper, Round, Metal, 18 H x 16 Dia.	2	C	C	C	.	.	.	.	.	.
F3200	Clock, Battery, 12" Diameter	1	C	C	C	.	.	.	.	.	.
M0750	Flowmeter, Air, Connect w/50 PSI Supply	2	C	C	C	.	.	K	.	.	.
M0755	Flowmeter, Oxygen, Low Flow	2	C	C	C	.	.	A	.	.	.
M0760	Proportioner (Blender), Oxygen/Air	2	C	C	C	.	.	F	.	.	.
M0765	Regulator, Vacuum	6	C	C	C	.	.	B	.	.	.
M0800	Center, Infant Care	1	C	C	C	.	A	E	.	.	.
M1800	Computer, Microprocessing	1	C	C	C	.	A	.	.	.	.
M3070	Hamper, Linen, Mobile, w/Lid	1	C	C	C	.	.	.	.	.	.
M3072	Frame, Infectious Waste Bag w/Lid	2	C	C	C	.	.	.	.	.	.
M3110	Cabinet, Warming, F/S, 2 Heated Compartment, Elect	1	A	A	A	.	F	.	.	.	.
M3150	Distribution System, Medication, Automatic	1	C	C	C	.	A	.	.	.	.
M4100	Sphygmomanometer, Aneroid, Wall Mounted	2	C	C	C	.	.	.	.	.	.
M4116	Monitor, Vital Signs	2	C	C	C	.	A	.	.	.	.
M4200	Otoscope/Ophthalmoscope, Wall Mounted	2	C	C	C	.	A	.	.	.	.
M4255	Stand, IV, Adjustable	4	C	C	C	.	.	.	.	.	.
M4266	Pump, Volumetric, Infusion, Multiple Line	4	C	C	C	.	A	.	.	.	.

Medical Equipment Room Guide Plates

M4655	Stretcher, Mobile, CRS, 9 Position	2	C	C	C	.	.	.	.	.	.
M7490	Light, Surg, Ceiling Mtd, Dual, Unequal Dia Heads	2	A	A	A	.	F	.	.	.	J
M7660	Defibrillator/Monitor/Recorder, Portable	1	C	C	C	.	A	.	.	.	.
M7710	Electrocardiograph, 12 Lead, Portable	1	C	C	C	.	A	.	.	.	.
M7845	Monitor, Physiological, Bedside, 4 Channel	2	C	C	C	.	A	.	.	.	D
M7905	Oximeter, Pulse	1	C	C	C	.	A	.	.	.	.
M7910	Thermometer, Electronic	2	C	C	C	.	.	.	.	.	.
M8810	Stand, Mayo	2	C	C	C	.	.	.	.	.	.
M8900	Carriage, Pail, CRS, Without Pail	2	C	C	C	.	.	.	.	.	.
M8905	Pail, Utility, CRS, Without Carriage	2	C	C	C	.	.	.	.	.	.
M8970	Warmer, Blood, High Volume	1	C	C	C	.	B	.	.	.	.
P6980	Sink, Scrub, SS, 1-3 Bay, With Knee Valve	1	A	A	A	D	B	.	.	.	.
X3990	Illuminator, Film, 4 Panels, Wall Mounted	2	C	C	C	.	A	.	.	.	.